4 SCHEMATIC DIAGRAM

4.1 IRAN KHODRO XU7 SLC

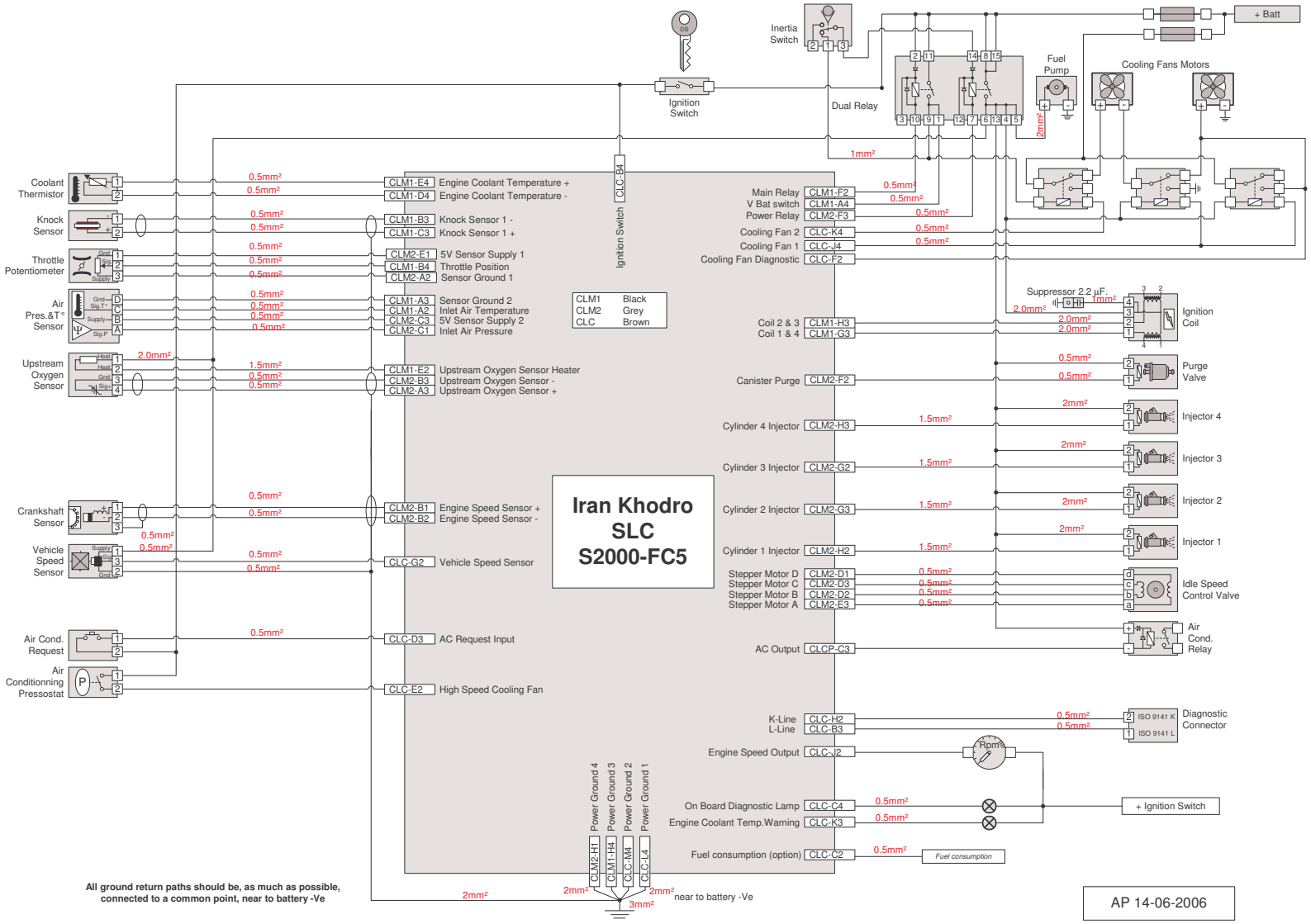

Valeo EMS document. Duplication or disclosure prohibited.
The original version of this document is digitally stored on RDU intranet. The printed version of this document is for information only.